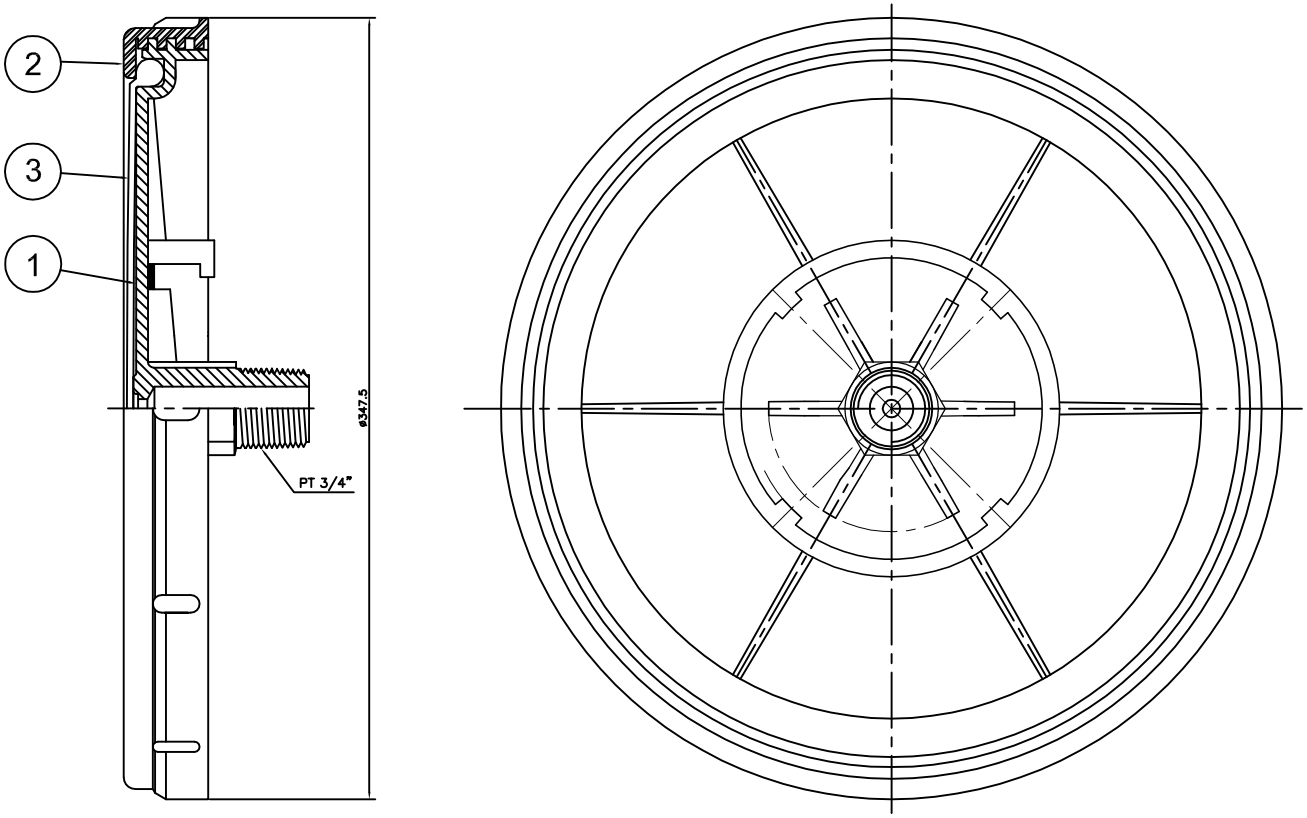

PART No.	PART NAME	MATERIAL	Q'TY	REMARKS
3	MEMBRANE	EPDM	1	9"
2	RETAINING NUT	PP	1	
1	BASE	POLYPROPYLENE	1	

SSI DISC™ DIFFUSER

SCALE : NTS	DATE : 98.03.15	REVISED : M1	DRAWN BY : LYK
STAMFORD SCIENTIFIC INTERNATIONAL Inc			DWG No. AF 270-A01
			MODEL AF 270